ModalAI ESC/UART/TELEM Cable Options

(for various configurations of ESC/FC/Companion Board)

From Left to right, view this diagram as "upgrade paths" from Voxl1 or FCv1 to FCv2 and then Voxl2
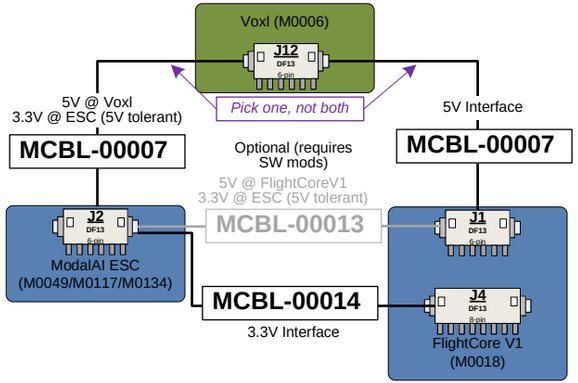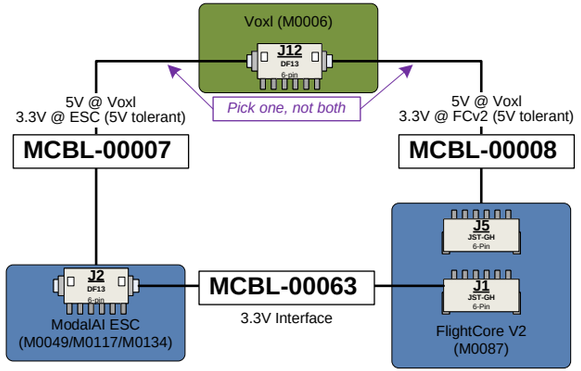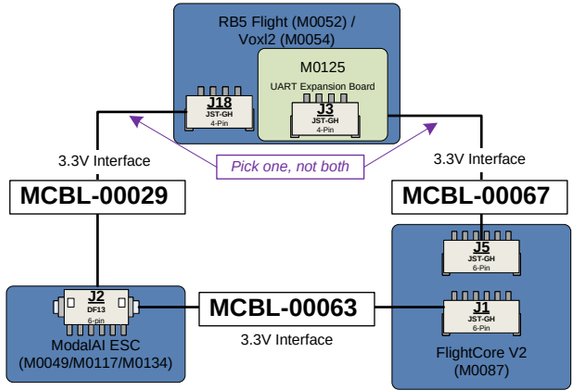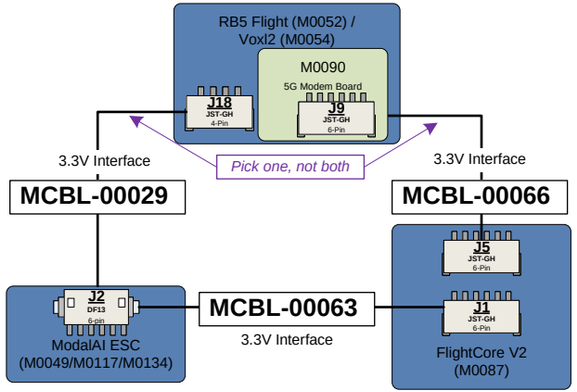
In all cases, only one link is possible/expected from Voxl/Voxl2 to an ESC or FlightCore, not both. The Flight Controller runs the motor controller.